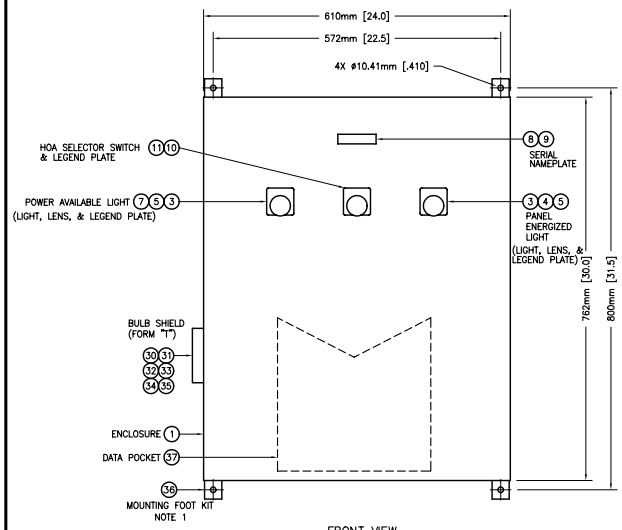

FRONT VIEW

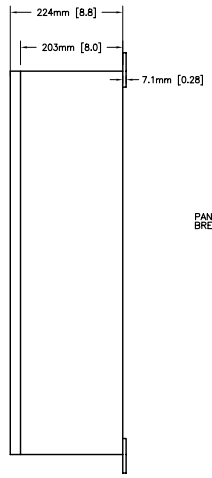

SIDE VIEW

NON-DISCONNECT ENCLOSURE

NOTE 3

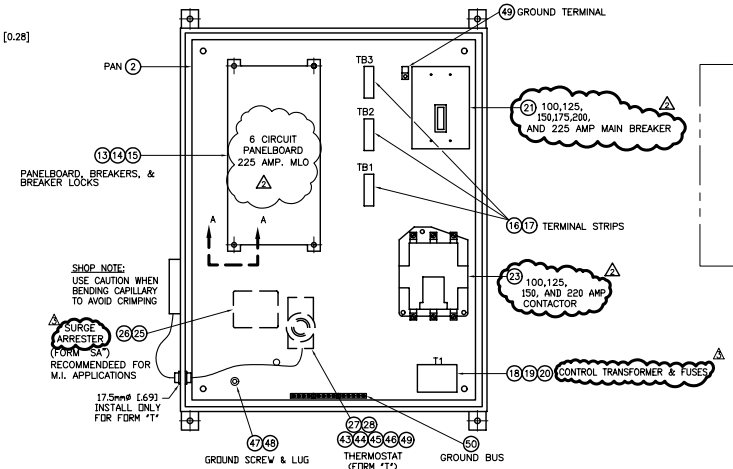

COMPONENT LAYOUT

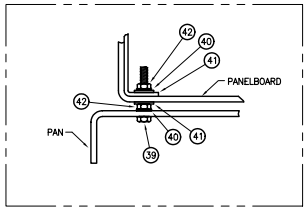

VIEW A-A
PANELBOARD MTG.

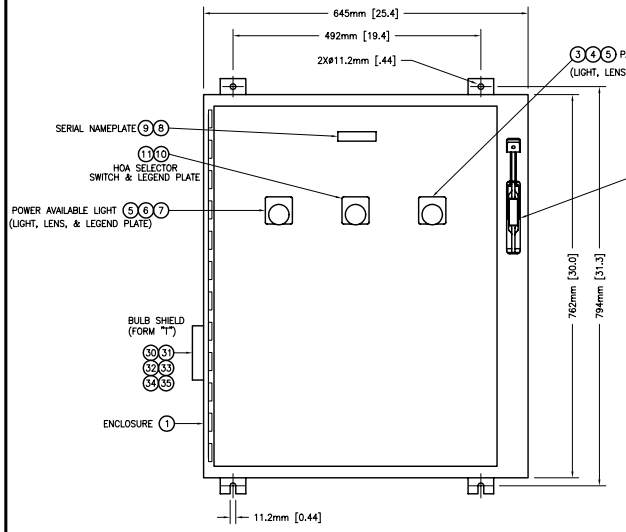

FRONT VIEW

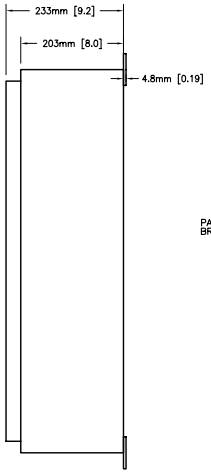

SIDE VIEW

DISCONNECT ENCLOSURE

(FORM D)

NOTE 4

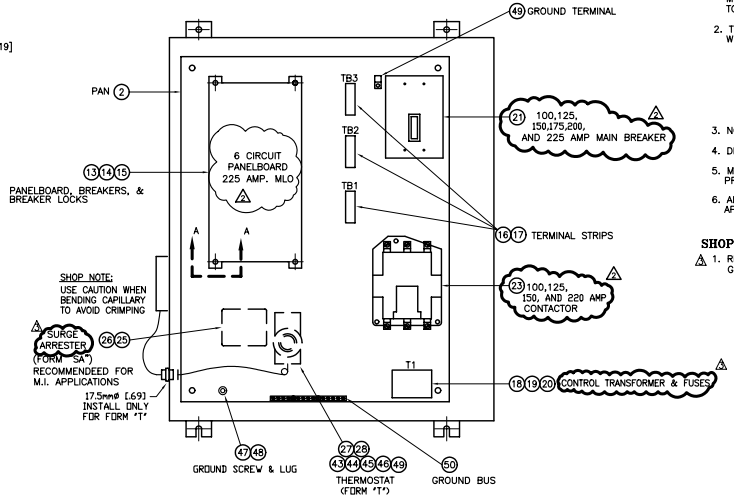

COMPONENT LAYOUT

NOTES:

1. FOR THE NON-DISCONNECT ENCLOSURE, THE CUSTOMER HAS TWO CHOICES OF ENCLOSURE MOUNTING. EXTERNAL MOUNTING FEET CAN BE INSTALLED AND MOUNTING DIMENSIONS WILL BE AS SHOWN. IF CUSTOMER CHOOSES TO USE INTERNAL MOUNTING, SUBTRACT 1.5" FROM THE MOUNTING FOOT DIMENSIONS SHOWN. THESE STATEMENTS DO NOT APPLY TO THE DISCONNECT ENCLOSURE PRODUCT.
2. THE BASE PRODUCT IS OFFERED IN THE NON-DISCONNECT ENCLOSURE WITH BOLT ON BREAKERS. AVAILABLE OPTIONS ARE:
   1) FORM D – DISCONNECT ENCLOSURE
   2) FORM T – INTERNAL THERMOSTAT
   3) FORM SA – SURGE ARRESTER
   4) FORM S – SNOW MELT APPLICATIONS.
   △1 5) FORM UL – UL508A PANEL CERTIFICATION.
3. NON-DISCONNECT ENCLOSURE AVAILABLE IN NEMA 12 AND 4, 4X.
4. DISCONNECT ENCLOSURE AVAILABLE IN NEMA 12 AND 4, 4X.
5. MAXIMUM MAIN BREAKER AND CONTACTOR COMBINATION FOR THIS PRODUCT IS RATED AT 150 AMPS.
6. ALL COMPONENTS, WITH THE EXCEPTION OF THE THERMOSTAT ARE U.L. APPROVED AND CSA CERTIFIED. THE THERMOSTAT IS CSA CERTIFIED.

SHOP NOTE:

△1 1. REMOVE PAINT FROM PAN, UNDER GROUND LUG & BUS BEFORE MOUNTING GROUND LUG AND GROUND BUS.

REFERENCE DWGS:

NON DISCONNECT ENCLOSURE		DISCONNECT ENCLOSURE	
GC-0677	WIRING DIAGRAM	GC-0677	WIRING DIAGRAM
GA-1871	DOOR MACHINING	GA-1872	DOOR MACHINING
GB-0454	FIELD WIRING (3ø)	GB-0454	FIELD WIRING (3ø)
GB-0453	FIELD WIRING (1ø)	GB-0453	FIELD WIRING (1ø)

COMPANY CONFIDENTIAL-INFORMATION CONTAINED HEREIN IS CONFIDENTIAL, IT IS THE PROPERTY OF NELSON HEAT TRACE; IT IS TO BE USED SOLELY FOR THE PURPOSE PROVIDED, AND IT IS NOT TO BE DISCLOSED TO OTHERS WITHOUT PRIOR WRITTEN CONSENT OF NELSON HEAT TRACE.

REVISION	DATE	
R3 ADD GROUND SCS. UL & NMTL	10/14/02	JM
R2 CHANGED TO WEIST. PNLBD. JAYC. J.HALL	1/25/97	
R1 ADD PARTS TO FORM "T" JLT. J.HALL	3/27/96	
R0 ISSUED FOR WORK ORDER JLT. J.HALL	10/20/96	

ASSEMBLY
AMBIENT CONTROL PANEL
6 CIRCUIT 277VAC MAX. NEMA 12&4,4X

AP6PC | CLASS 305

REF: | DATE
DSGN: JLT | 12/20/96
APPD: J.HALL | 12/20/96
DOC#: GD-0359
SC: .188=1 | D/L

CONFIDENTIAL PROPERTY OF
NELSON HEAT TRACING SYSTEMS
TULSA, OK, USA
PHONE (918)627-5530 FAX (918)622-9308

GD-0359

R 3