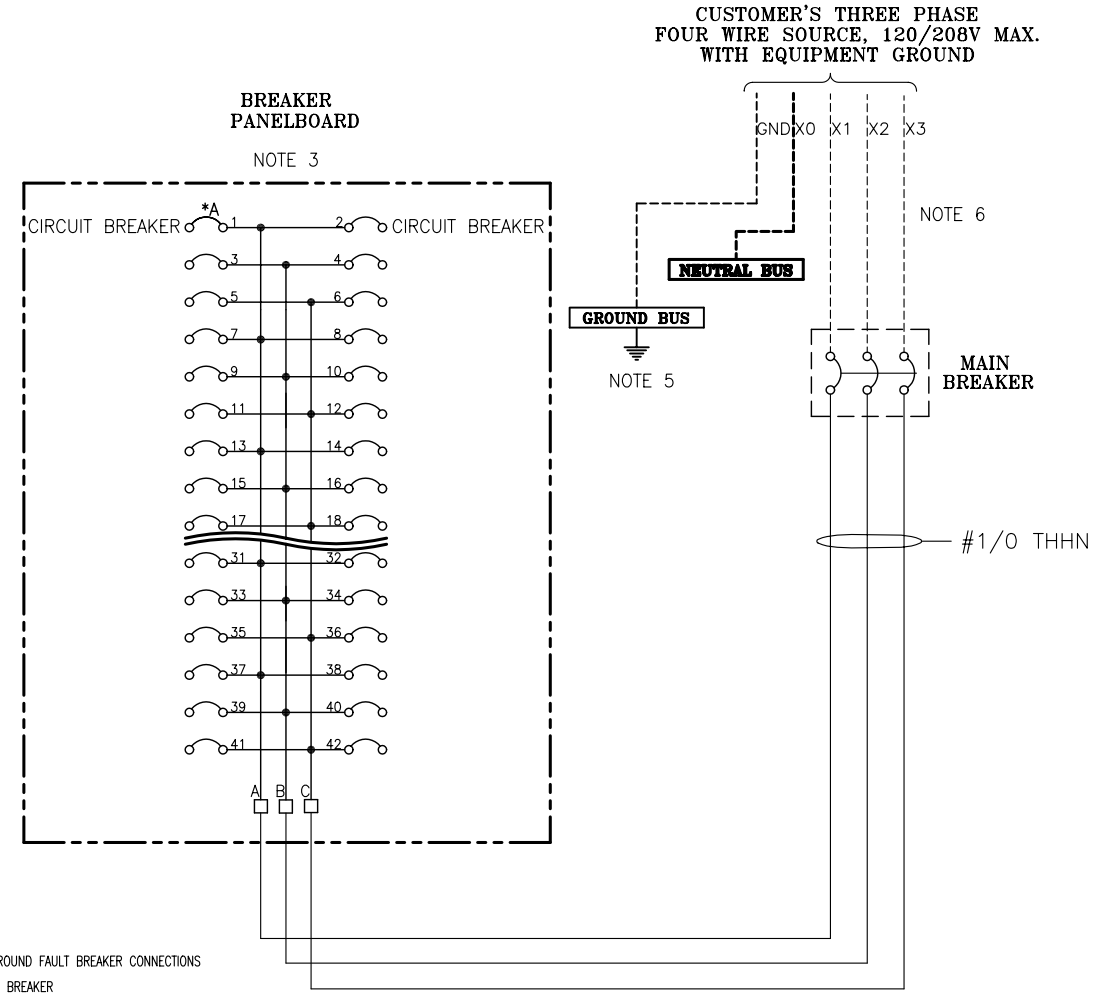

REFERENCE DRAWING

GD-404	ASSEMBLY
GB-632	FIELD WIRING (3ø) GB-631 FIELD WIRING (1ø)
GA-2265	DOOR MACHINING (NON-DISCONNECT ENCLOSURE)
GA-2266	DOOR MACHINING (DISCONNECT ENCLOSURE)

NOTES:

1. ALL WIRE TO HAVE INSULATION SPADE TYPE LUGS AND NATVAR TUBING WITH PRINTED WIRE NUMBERS. OMIT THE LUG ON THE COMPRESSION OR SADDLE TYPE TERMINAL.
2. DASHED LINES INDICATE FIELD WIRING.
3. IF GROUND FAULT BREAKERS ARE USED, CONDUIT MUST BE DRY AND ELECTRICAL CONNECTIONS IN JUNCTION BOX MUST BE WATER-TIGHT. BREAKER TRIPPING WILL RESULT IF THESE CONDITIONS ARE NOT MET.
4. TO HELP PREVENT CONDENSATION ENTERING ENCLOSURE, INSTALL CONDUIT USING BOTTOM ENTRY WHEN POSSIBLE.
5. ENCLOSURE MUST BE GROUNDED PER APPLICABLE ELECTRICAL CODES.
6. DASHED LINE INDICATES FIELD WIRING.
7. FOR A SINGLE PHASE SOURCE, ELIMINATE X3, WIRING TO L3 OF MAIN BREAKER, AND WIRING TO PHASE "C" OF PANELBOARD.

COMPANY CONFIDENTIAL-INFORMATION CONTAINED HEREIN IS CONFIDENTIAL, IT IS THE PROPERTY OF NELSON HEAT TRACE, IT IS TO BE USED SOLELY FOR THE PURPOSE PROVIDED, AND IT IS NOT TO BE DISCLOSED TO OTHERS WITHOUT PRIOR WRITTEN CONSENT OF NELSON HEAT TRACE.

*A TYPECAL GROUND FAULT BREAKER CONNECTIONS

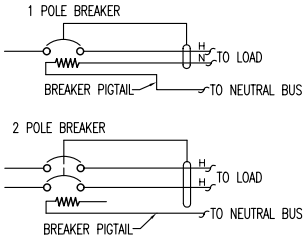

SHOP NOTES:

1. REMOVE PAINT FROM PANEL, UNDER GROUND BUS, BEFORE MOUNTING GROUND BUS
2. LEAVE 4.25" CLEARANCE BETWEEN BOTTOM OF PANEL-BOARD AND BOTTOM OF ENCLOSURE TO INSURE PROPER BEND RADIUS OF 1/0 CONDUCTORS.

REVISION	DATE			
R0 ISSUED FOR MANUFACTURE	11/08/02	WIRING DIAGRAM DISTRIBUTION PANEL (3PH) 42 CIRCUIT 120/208VAC MAX NEMA 12, 4, 4X	REF: GD404	DATE
DMB			DSGN: DMB	11/08/02
			APPD: DMB	11/08/02
			DOC#: GB0629	
		CATALOG# DP42PC / CLASS 305	SC: NONE	D/L
		CONFIDENTIAL PROPERTY OF NELSON HEAT TRACING SYSTEMS TULSA, OK, USA PHONE (918)627-5530 FAX (918)622-9308	GB629	R 0