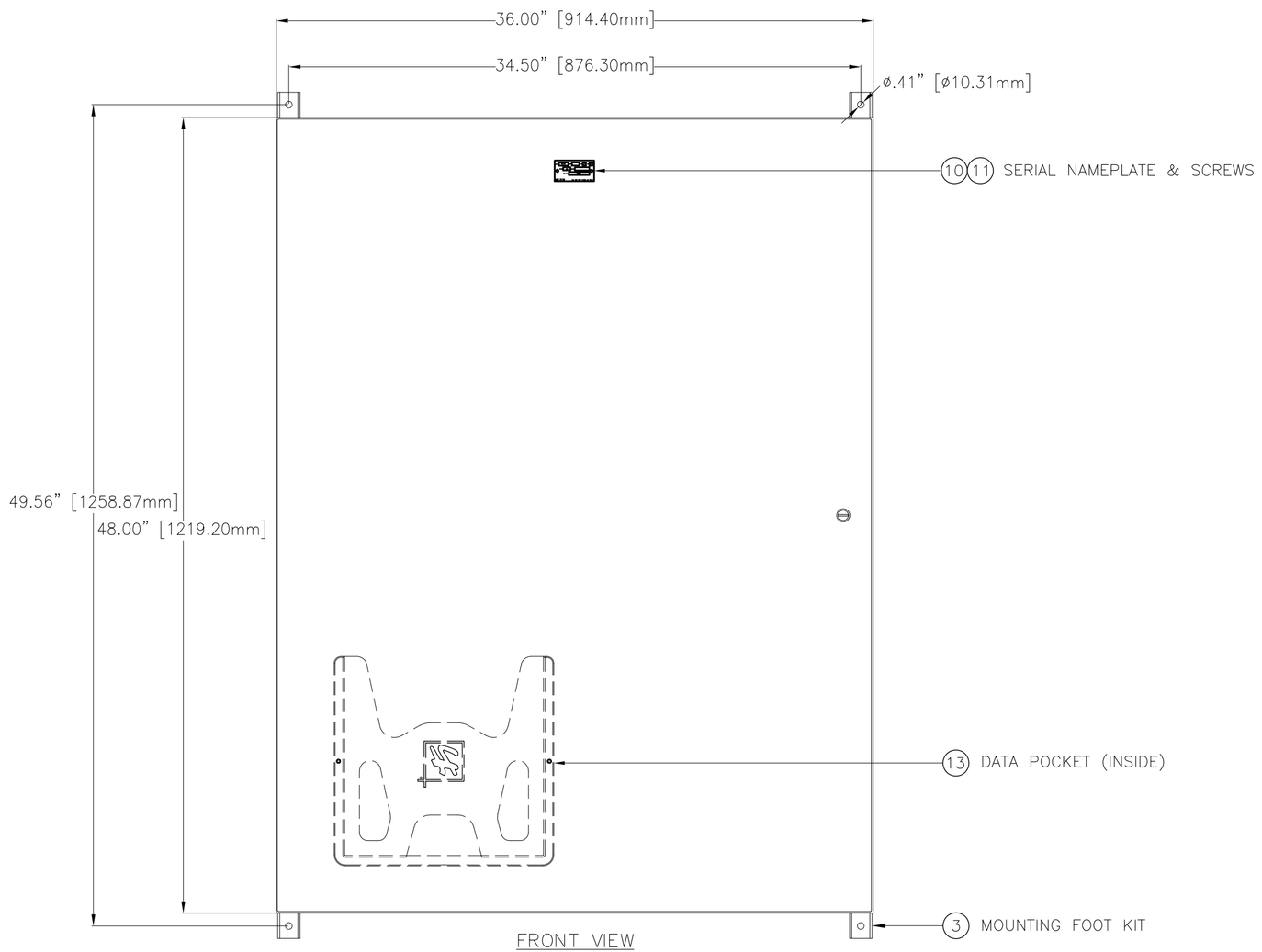

FRONT VIEW

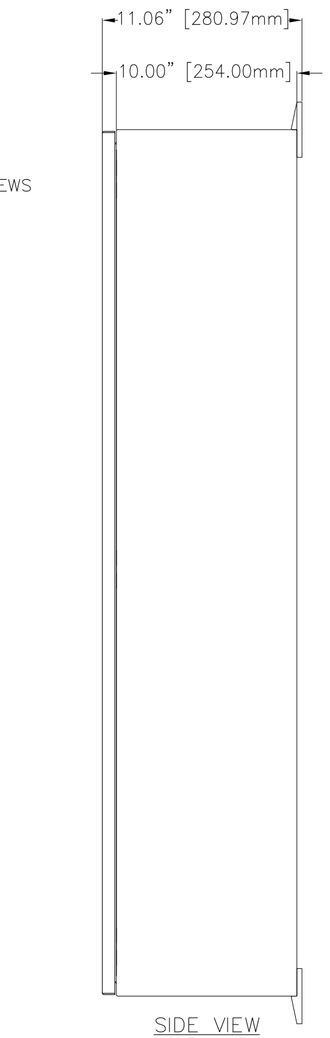

SIDE VIEW
NON-DISCONNECT ENCLOSURE

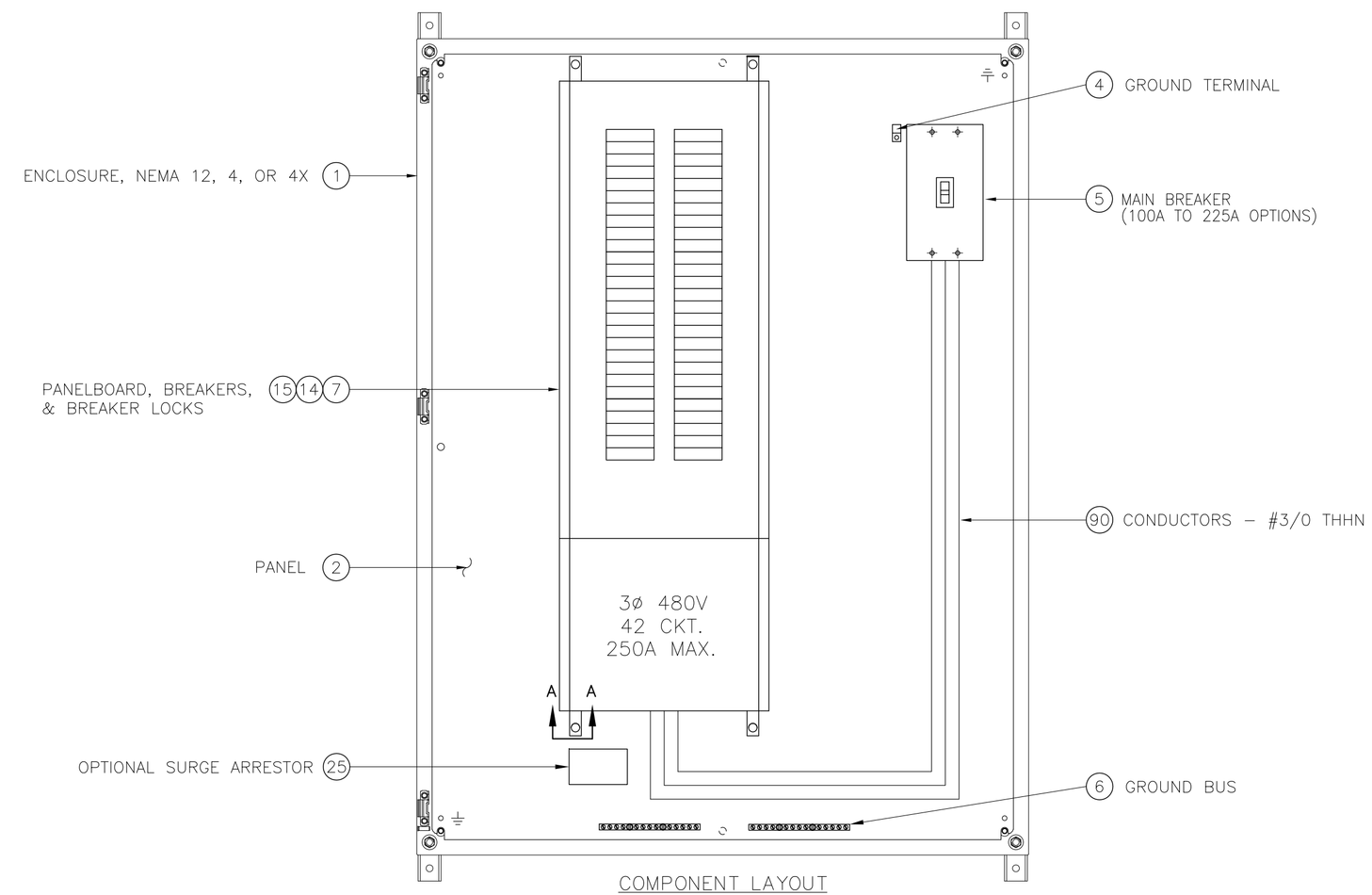

COMPONENT LAYOUT

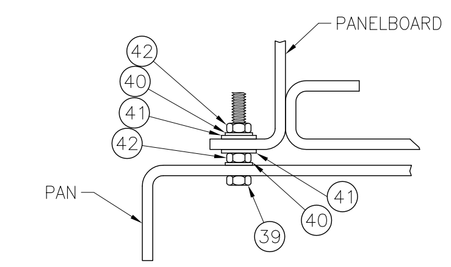

SECTION A–A
PANELBOARD MOUNTING

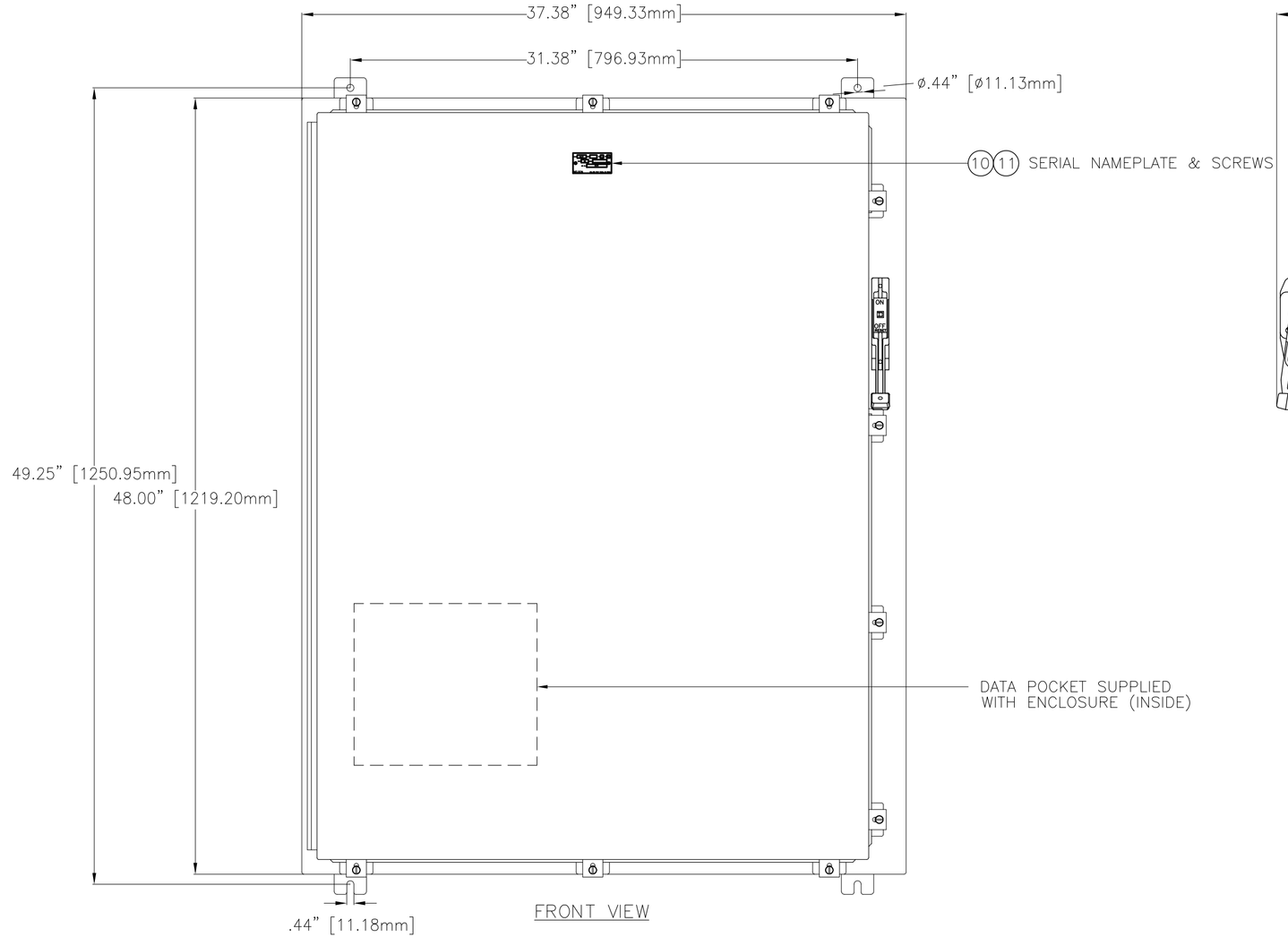

FRONT VIEW

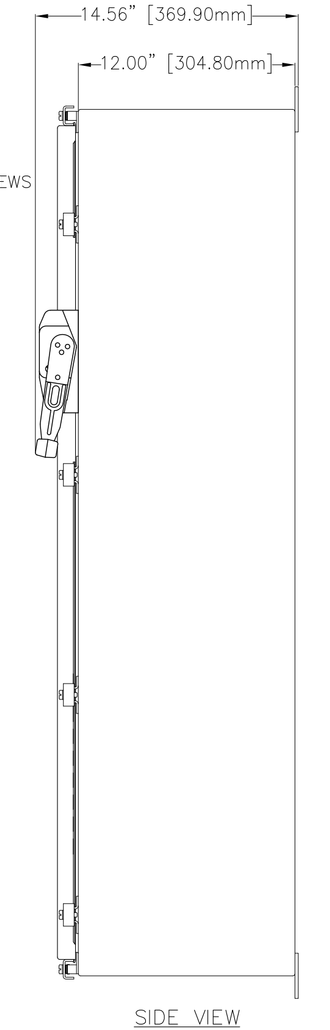

SIDE VIEW
DISCONNECT ENCLOSURE

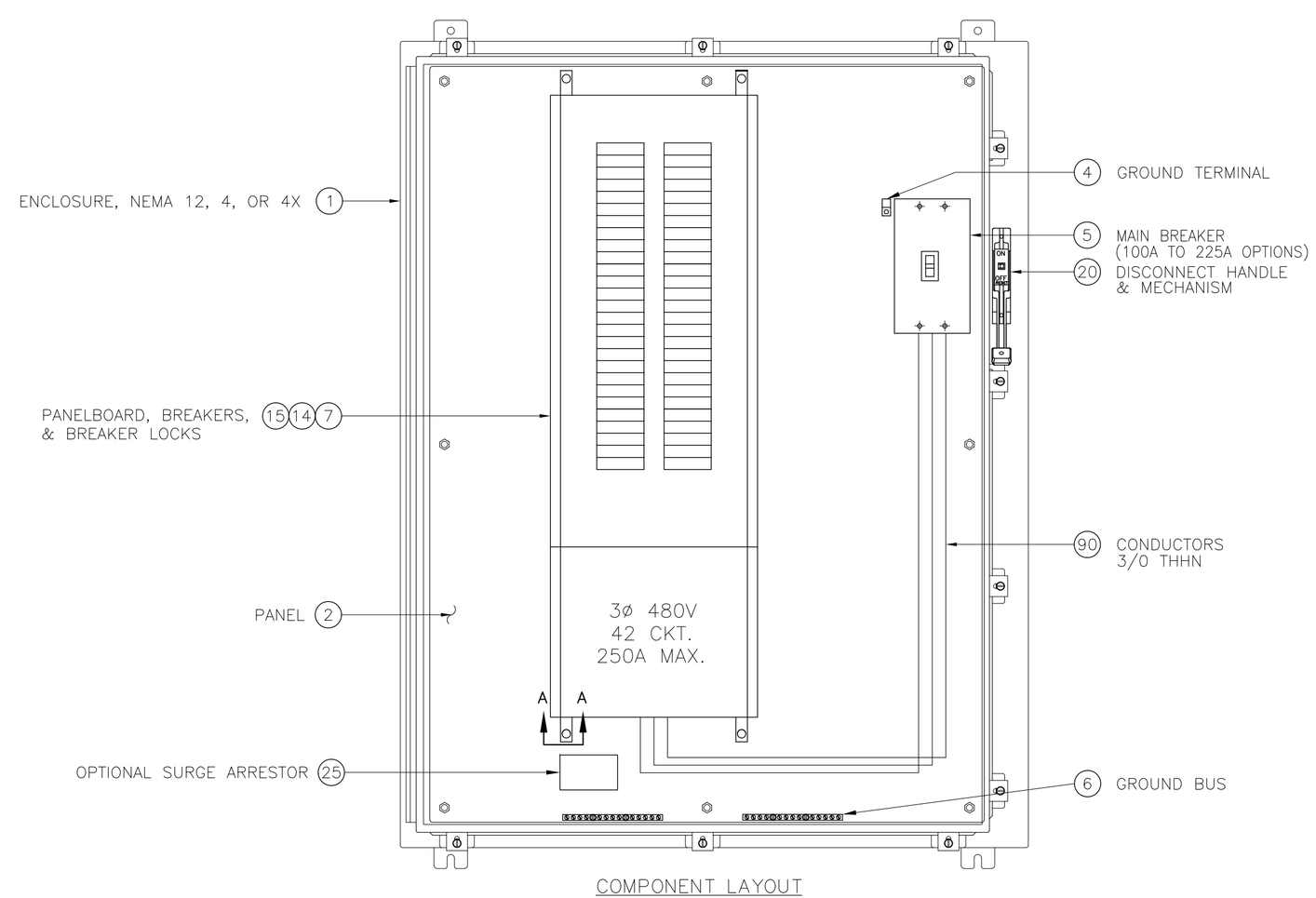

COMPONENT LAYOUT

NOTES:

1. FOR THE NON–DISCONNECT ENCLOSURE, THE CUSTOMER HAS TWO CHOICES OF ENCLOSURE MOUNTING. EXTERNAL MOUNTING FEET ARE STANDARD AND MOUNTING DIMENSIONS WILL BE AS SHOWN. IF THE CUSTOMER CHOOSES TO USE INTERNAL MOUNTING, SUBTRACT 1.5" FROM MOUNTING FOOT DIMENSIONS SHOWN. THESE STATEMENTS DO NOT APPLY TO THE DISCONNECT ENCLOSURE PRODUCT.
2. AVAILABLE OPTIONS ARE:
   NON–DISCONNECT ENCLOSURE AVAILABLE IN NEMA 12 & 4, 4X.
   DISCONNECT ENCLOSURE AVAILABLE IN NEMA 12 & 4, 4X.
   MAIN BREAKER SIZE
   SURGE ARRESTOR.

REFERENCE DRAWING:

WIRING DIAGRAM – GD0419

SHOP NOTES:

1. REMOVE PAINT FROM PANEL, UNDER GROUND BUS, BEFORE MOUNTING GROUND BUS.
2. LEAVE MINIMUM OF 4.7" CLEARANCE BETWEEN BOTTOM OF PANEL–BOARD AND BOTTOM OF ENCLOSURE TO INSURE PROPER BEND RADIUS OF #3/0 THHN CONDUCTORS.

COMPANY CONFIDENTIAL–INFORMATION CONTAINED HEREIN IS CONFIDENTIAL. IT IS THE PROPERTY OF NELSON HEAT TRACE, IT IS TO BE USED SOLELY FOR THE PURPOSE PROVIDED, AND IT IS NOT TO BE DISCLOSED TO OTHERS WITHOUT PRIOR WRITTEN CONSENT OF NELSON HEAT TRACE.

REVISION	DATE	
R0 ISSUED FOR MANUFACTURE DMB	04\30\07	

ASSEMBLY
DISTRIBUTION PANEL, 20 CIRCUIT
480/277VAC, 225A MAX., NEMA 12, 4, 4X

CAT# DP20PC | CLASS: 305

REF: GD0419	DATE	
DSGN: DMB	04\30\07	
APPD: DMB	04\30\07	
DOC#: GD0418		
SC: NONE	D/L	

CONFIDENTIAL PROPERTY OF
NELSON HEAT TRACING SYSTEMS
TULSA, OK, USA
PHONE (918)627–5530 FAX (918)622–9308

GD0418
R 0